HNL20-A

LIQUID LEVEL/TEMPERATURE INTEGRATED SENSOR



HNL20-A PRODUCT FEATURES

1. Easy-to-read, remote level monitoring
2. New design, compact and durable
3. DIN43650 Hirschmann connector
4. NBR/304 stainless steel float available
5. Flexible configuration, selectable output range

PRODUCT INTRODUCTION

The HNL20-A series integrated level/temperature sensor features a built-in Hall effect magnetic element and an external magnetic float that monitors the liquid level as it rises or falls. It provides continuous level measurement and is available with optional NBR oily and stainless steel floats. It is suitable for different media and features a simplified, miniaturized design and attractive appearance to meet equipment upgrade needs.

1. Machine Tools
2. Hydraulic and Pneumatic Systems
3. Pumps and Compressors
4. Machinery Manufacturing
5. Automation Equipment

Product size (mm)

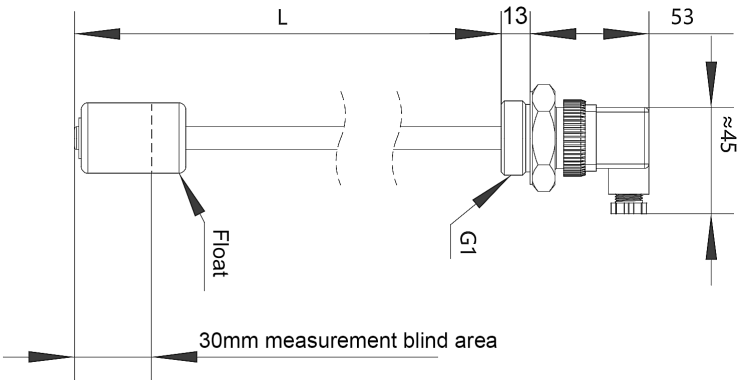

Wiring Diagram

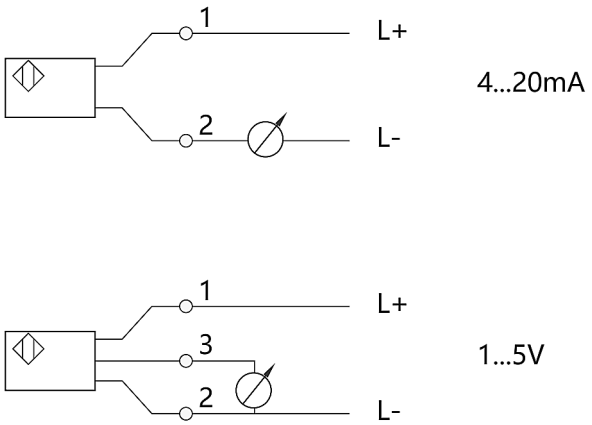

TECHNICAL PARAMETER

NAME	SPECIFICATION
Power supply	DC16...30V
Current consumption	Maximum 40mA
Electrical connection	DIN43650 Hirschmann connector
Safety	Short-circuit protection, reverse polarity protection
Insulation	DC500V
Overvoltage	DC36V
Switch-on time	2s
Response time	Analog signal ≤5ms
Load	Analog signal 4...20mA ≤500Ω
Measurement accuracy	5mm
Long-term drift	5mm
Media temperature	-20...85°C
Ambient temperature	-20...85°C
Storage temperature	-20...65°C
Relative humidity	45...75%
Vibration resistance	20g, 10...2000Hz (compliant with IEC60068-2-6)
Shock resistance	50g, 6ms (compliant with IEC60068-2-27)
Protection rating	IP65
Wetted parts	304 stainless steel/NBR
Meter housing	304 stainless steel
Process connection	G1

HNL20-A LIQUID LEVEL/TEMPERATURE SENSOR SELECTION TABLE

NAME	CODE	CODE DESCRIPTION
Product Type	1	Liquid Level Sensor
	2	Liquid Level + Temperature Sensor
Measuring range	L0150	150mm
	L0200	200mm
	L0250	250mm
	L0350	350mm
	L0500	500mm
	L0750	750mm
	L1000	1000mm
Float material	N	Float Material: NBR (Oil)
	S	Float Material: 304 (Water) Only available with G1-1/2 or higher external thread or flange
Output signal	A	4-20mA
Process connection	-	G1 external thread
	G112M	G1-1/2 external thread
	F25	DN25 flange connection

HONNO

Dedicated to process control solutions